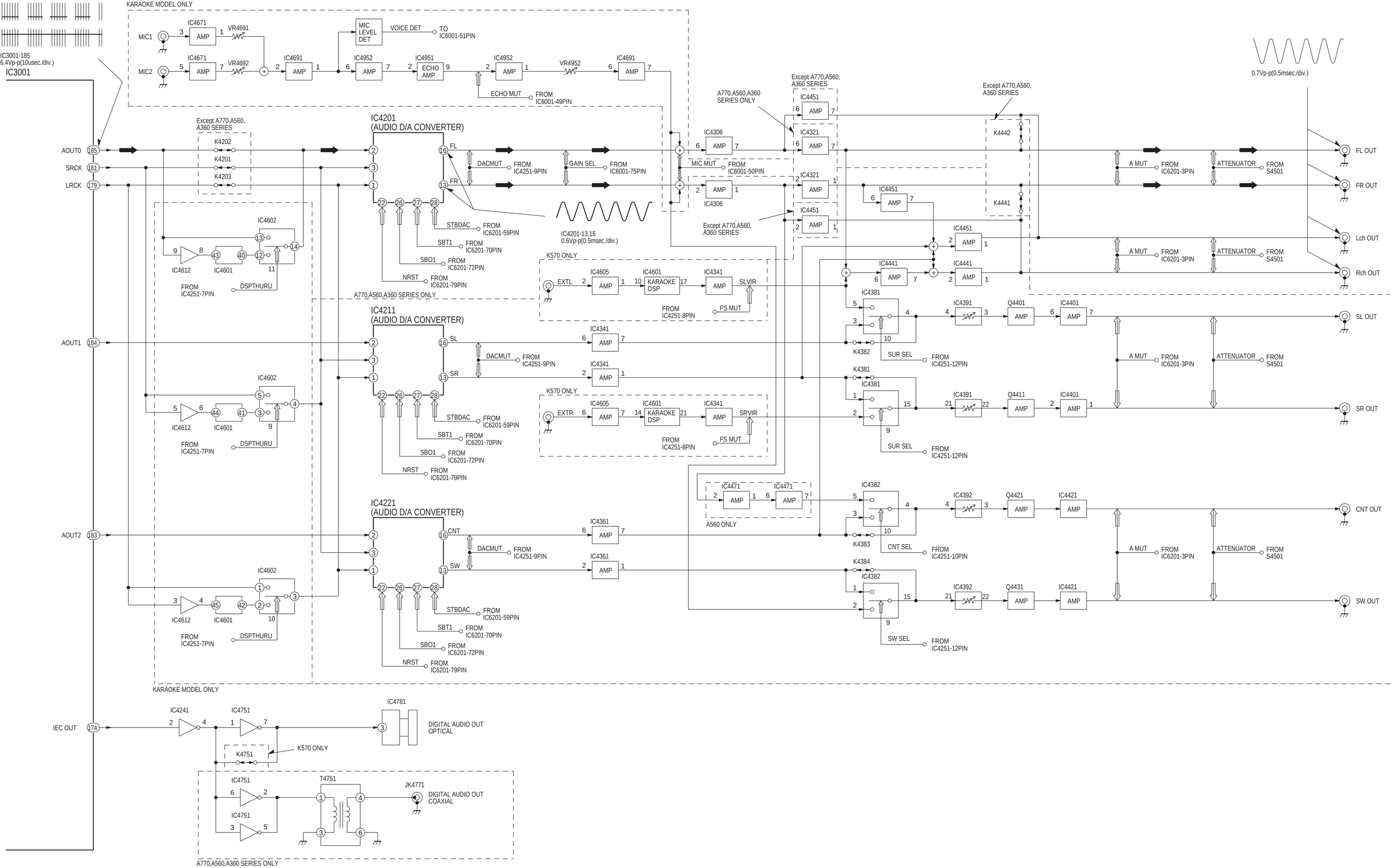

KARAOKE MODEL ONLY
IC3001-185
6.4Vp-p(10usec./div.)
IC3001
MIC1
MIC2
IC4671
AMP
VR4691
VR4692
IC4691
MIC LEVEL DET
VOICE DET
TO IC6001-51PIN
IC4952
IC4951
ECHO AMP
VR4952
ECHO MUT
FROM IC6001-49PIN
0.7Vp-p(0.5msec./div.)
Except A770,A560, A360 SERIES
K4202
K4201
K4203
AOUT0
SRCK
LRCK
IC4201
(AUDIO D/A CONVERTER)
FL
FR
DACMUT
FROM IC4251-9PIN
GAIN SEL
FROM IC6001-75PIN
STBDAC
FROM IC6201-59PIN
SBT1
FROM IC6201-70PIN
SBO1
FROM IC6201-72PIN
NRST
FROM IC6201-79PIN
IC4201-13,15
0.6Vp-p(0.5msec./div.)
IC4306
MIC MUT
FROM IC6001-50PIN
A770,A560,A360 SERIES ONLY
IC4451
IC4321
K4442
K4441
A MUT
FROM IC6201-3PIN
ATTENUATOR
FROM S4501
FL OUT
FR OUT
Lch OUT
Rch OUT
IC4602
IC4612
IC4601
FROM IC4251-7PIN
DSPTHURU
K570 ONLY
EXTL
IC4605
IC4601
KARAOKE DSP
IC4341
SLVIR
FROM IC4251-8PIN
FS MUT
IC4441
IC4381
IC4391
Q4401
IC4401
SL OUT
K4382
SUR SEL
FROM IC4251-12PIN
AOUT1
IC4211
(AUDIO D/A CONVERTER)
SL
SR
EXTR
SRVIR
K4381
Q4411
SR OUT
IC4471
A560 ONLY
IC4382
IC4392
Q4421
IC4421
CNT OUT
K4383
CNT SEL
FROM IC4251-10PIN
AOUT2
IC4221
(AUDIO D/A CONVERTER)
CNT
SW
IC4361
K4384
Q4431
SW OUT
SW SEL
KARAOKE MODEL ONLY
IEC OUT
IC4241
IC4751
IC4781
DIGITAL AUDIO OUT OPTICAL
K4751
T4751
JK4771
DIGITAL AUDIO OUT COAXIAL
A770,A560,A360 SERIES ONLY